Long Distance Square Inductive Proximity Sensor

E2Q2

Square Proximity Sensor

- Terminal Housing
- Active face direction changeable
- Easy to install and same mounting dimensions as a standard style electro-mechanical limit switch
- Integrated short circuit and reverse polarity protection
- Robust body with stainless steel screws

Ordering Information

DC type

Sensing distance	Connection	Active face	Output		
				NO	NO + NC
20 mm shielded	Terminals	Changeable	NPN	E2Q2-N20E1-H	E2Q2-N20E3-□
			PNP	E2Q2-N20F1-H	E2Q2-N20F3-□
30 mm non-shielded			NPN		E2Q2-N30ME3-□
			PNP		E2Q2-N30MF3-□
40 mm non-shielded			NPN		E2Q2-N40ME3-□
			PNP		E2Q2-N40MF3-□

□ = H: terminal conduit M20x1,5
U: terminal conduit 1/2“ NPT

AC type

Sensing distance	Connection	Active face	Output		
				NO	NO or NC
15 mm shielded	Terminals	Changeable	AC		E2Q2-N15Y4-□
30 mm shielded			AC		E2Q2-N30MY4-□

□ = H: terminal conduit M20x1,5
U: terminal conduit 1/2“ NPT

Weld-Field Immune DC type (100mT)

Sensing distance	Connection	Active face	Output		
				NO	NO + NC
15 mm shielded	Terminal conduit ½“ NPT	Changeable	PNP	E2Q2-N15F1-51	

Weld-Field Immune AC type (100mT)

Sensing distance	Connection	Active face	Output		
				NO	NO or NC
15 mm shielded	Terminal conduit ½“ NPT	Changeable	AC		E2Q2-N15Y4-51

Rating/performance

DC type

Item / Model	shielded		non-shielded	
	E2Q2-N15F1-51 weld-immune type	E2Q2-N20□□-□	E2Q2-N30□□-□	E2Q2-N40□□-□
Sensing distance Sn	15 mm ± 10%	20 mm ± 10%	30 mm ± 10%	40 mm ± 10%
Standard target size, L x W x H, Fe 37	45 x 45 x 1 mm	60 x 60 x 1 mm	90 x 90 x 1 mm	120 x 120 x 1 mm
Setting distance	0 to 12,15 mm	0 to 16,2 mm	0 to 24,3 mm	0 to 32,4 mm
Switching frequency	10 Hz (weld-field immune type)	150 Hz	100 Hz	30 Hz
Sensing object	Ferrous metals			
Differential travel	15% max. of sensing distance Sn			
Operating voltage	10 to 30 VDC	10 to 60 VDC		
Current consumption	20 mA max.		10 mA max.	20 mA max.
Control output – Type	E2Q2-N□□□E1-□□: NPN - NO E2Q2-N□□□E3-□□: NPN - NO + NC E2Q2-N□□□F1-□□: PNP - NO E2Q2-N□□□F3-□□: PNP - NO + NC			
Control output – Load	200 mA max.			
Control output – On-stage voltage drop	3 VDC max. (at 200 mA load current)			
Circuit protection	Reverse polarity, output short circuit			
Alternating magnetic field	100 mT	---		
Indicator	Operating indicator (yellow LED), operating voltage (green LED)			
Ambient temperature	Operating: -25° to 70°C			
Ambient humidity	35 to 95% RH			
Influence of temperature	± 10% max. of Sn at 23° in temperature range of -25° to 70°C			
Dielectric strength	1.500 VAC, 50/60 Hz for 1 min. between current carry parts and case			
Electromagnetic compatibility EMC	EN 60947-5-2			
Vibration resistance	10 to 55 Hz, 1 mm amplitude according IEC 60068-2-6			
Shock resistance	Approx. 30 G for 11 ms according to IEC 60068-2-27			
Protection degree	IEC 60529 IP 67			
Connection – Terminals	Up to 2,5 mm²			
Material – Case Terminal base	PBT Al PBT (...-H type)			
Material – Sensing face	PBT			
Approvals	CSA CERTIFIED UL LISTED			

AC type

Item / Model		shielded		non-shielded
		E2Q2-N15Y4-51 weld-immune type	E2Q2-N15□□-□	E2Q2-N30□□-□
Sensing distance Sn		15 mm ± 10%		30 mm ± 10%
Standard target size, L x W x H, Fe 37		45 x 45 x 1 mm		90 x 90 x 1 mm
Setting distance		0 to 12,15 mm		0 to 24,3 mm
Switching frequency		20 Hz		
Sensing object		Ferrous metals		
Differential travel		15% max. of sensing distance Sn		
Operating voltage		20 to 253 VAC		
Off-state current		2,5 mA max.	1,9 mA max.	
Control output	Type	AC - NO or NC		
	Load	500 mA max.		
		10 mA min.	8 mA min.	
	On-stage voltage drop	12 VAC max. (at 500 mA load current)		
Circuit protection		---		
Alternating magnetic field		100 mT	---	
Indicator		Operating indicator (yellow LED), operating voltage (green LED)		
Ambient temperature		Operating: -25° to 70°C		
Ambient humidity		35 to 95% RH		
Influence of temperature		± 10% max. of Sn at 23° in temperature range of -25° to 70°C		
Dielectric strength		1.500 VAC / 2500 VAC (E2Q2-...-H), 50/60 Hz for 1 min. between current carry parts and case		
Electromagnetic compatibility EMC		EN 60947-5-2		
Vibration resistance		10 to 55 Hz, 1 mm amplitude according IEC 60068-2-6		
Shock resistance		Approx. 30 G for 11 ms according to IEC 60068-2-27		
Protection degree		IEC 60529 IP 67		
Connection	Terminals	Up to 2,5 mm²		
Material	Case Terminal base	PBT Al PBT (...-H type)		
	Sensing face	PBT		
Approvals		CSA CERTIFIED	UL LISTED	

E2Q2

Output Circuit Diagram

NPN output

Model	Operation mode	Timing chart	Output circuit
E2Q2-N20E1-H	NO	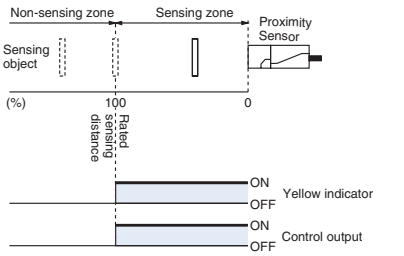	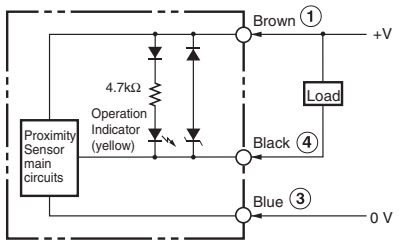
E2Q2-N20E3-□ E2Q2-N30ME3-□ E2Q2-N40ME3-□	NO + NC	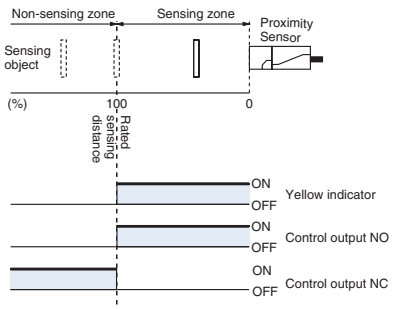	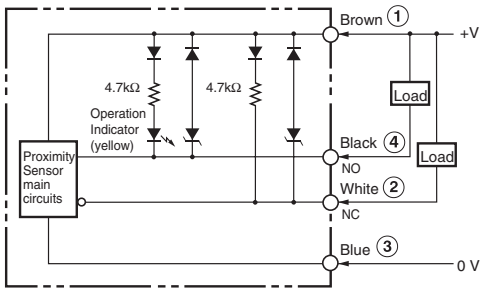

PNP output

Model	Operation mode	Timing chart	Output circuit
E2Q2-N20F1-H E2Q2-N15F1-51	NO	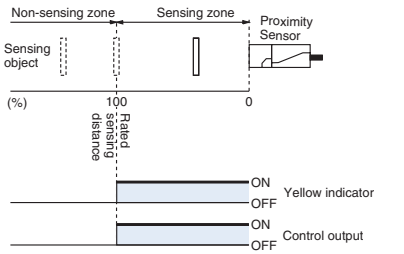	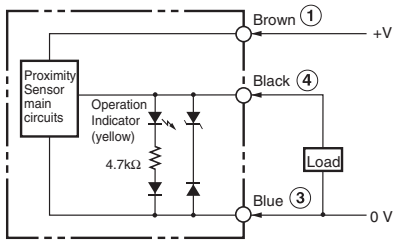
E2Q2-N20F3-□ E2Q2-N30MF3-□ E2Q2-N40ME3-□	NO + NC	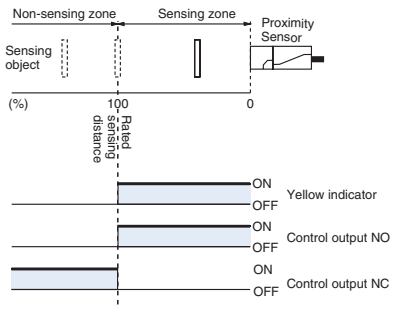	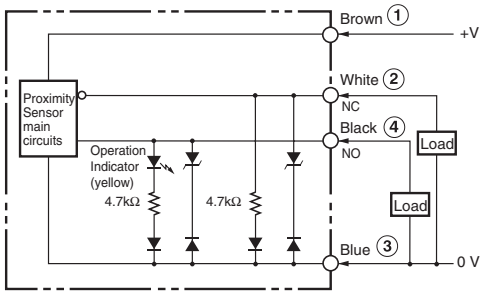

AC output

Model	Operation mode	Timing chart	Output circuit
E2Q2-N15Y4-51	NO or NC	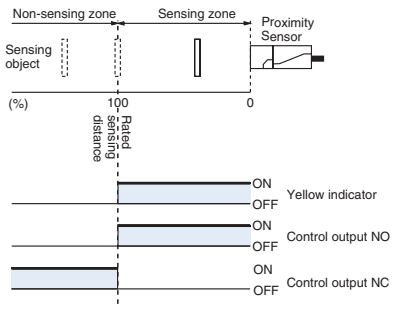	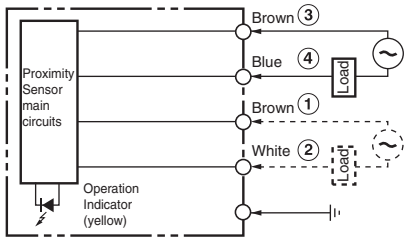 Note: Only one load allowed!

Dimensions (Unit: mm)

E2Q2-...-H type

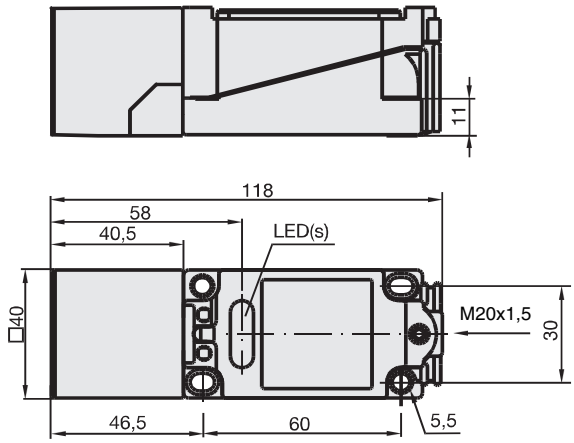

E2Q2-...-U and -51 type

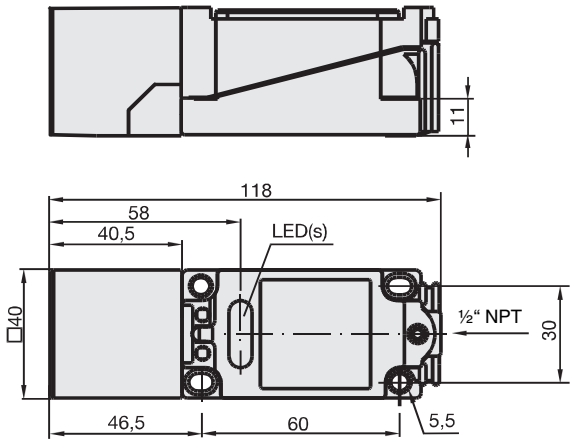

Connection

DC type

Connection type	Method	Description
AND (serial connection)	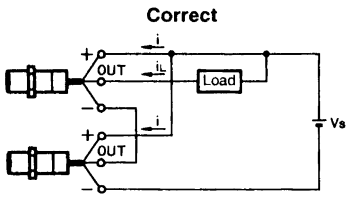	The Sensors connected together must satisfy the following conditions: $i_L + (N-1) \times i \leq$ Upper-limit of control output of each Sensor $V_S - N \times V_R \geq$ Load operating voltage N = No. of Sensors V_R = Residual voltage of each Sensor V_S = Supply voltage i = Current consumption of the Sensor i_L = Load current If the MY Relay, which operate at 24 VDC, is used as a load for example, a maximum of two Proximity Sensors can be connected to the load.
OR (parallel connec-tion)	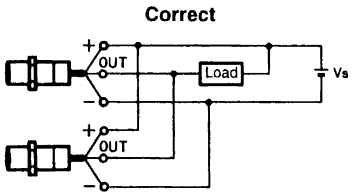	A minimum of three Sensors with current outputs can be connected in parallel. The number of Sensors connected in parallel varies with the Proximity Sensor model.

AC type

Connection type	Method	Description
AND (serial connection)	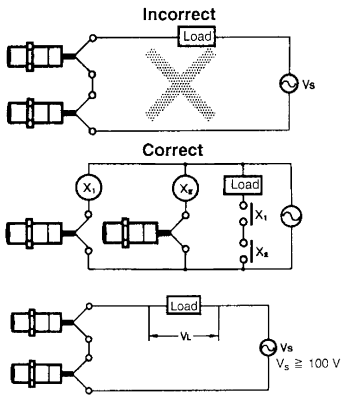	If 100 or 200 VAC is imposed on the Proximity Sensors, V_L (i.e., the voltage imposed on the load) will be obtained from the following. $V_L = V_S$ - (residual voltage x no. of Proximity Sensors) (V) Therefore, if V_L is lower than the load operating voltage, the load will not operate. A maximum of three Proximity Sensors can be connected in series provided that the supply voltage is 100 V minimum.
OR (parallel connec-tion)	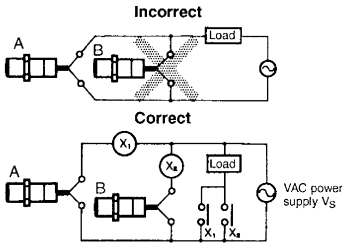	In principle, more than two Proximity Sensors cannot be connected in parallel. Provided that Proximity Sensor A does not operate with Proximity Sensor B simultaneously and there is no need to keep the load operating continuously, the Proximity Sensors can be connected in parallel. In this case, however, due to the total leakage current of the Proximity Sensors, the load may not reset properly. It is not possible to keep the load operating continuously with Proximity Sensors A and B in simultaneous operation to sense sensing objects due to the following reason. When Proximity Sensor A is ON, the voltage imposed on Proximity Sensor A will drop to approximately 10 V and the load current flows into Proximity Sensor A, and when one of the sensing objects is close to Proximity Sensor B, Proximity Sensor B will not operate because the voltage imposed on Proximity Sensor B is 10 V, which is too low. When Proximity Sensor A is OFF, the voltage imposed on Proximity Sensor B will reach the supply voltage and Proximity Sensor B will be ON. Then, Proximity Sensor A as well as Proximity Sensor B will be OFF for approximately 10 ms, which resets the load for an instant. To prevent the instantaneous resetting of the load, use a relay as shown on the left.

Precautions

⚠ Caution

Power supply

Do not impose an excessive voltage on the E2Q2, otherwise it may explode or burn.

Do not connect an AC power supply to any DC model. If AC power (100 VAC or more) is supplied to the sensor, it may explode or burn.

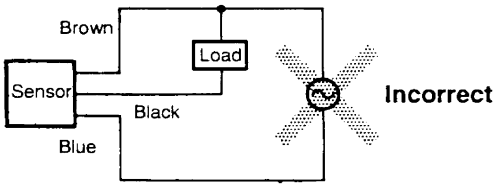

Do not connect the AC types without load to the power supply. The sensor will be damaged.

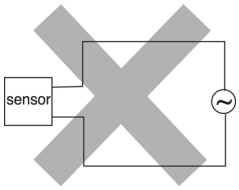

Be sure to abide by the following precautions for the safe operation of the Sensor.

Wiring

Power Supply Voltage and Output Load Power Supply Voltage

Make sure that the power supply to the Sensor is within the rated voltage range. If a voltage exceeding the rated voltage range is supplied to the Sensor, it may explode or burn.

Load Short-circuiting

Do not short-circuit the load, otherwise the Sensor may be damaged.

Connection without Load

Do not connect the power supply to the Sensor with no load connected, otherwise the internal elements may explode or burn.

Operating Environment

Do not use the Sensor in locations with explosive or flammable gas.

Correct Use

Design

Effects of Surrounding Metal

Provide a minimum distance between the Sensor and the surrounding metal as shown in the table below.

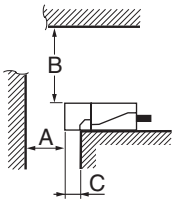

Effects of Surrounding Metal (Unit: mm)

Model Length	A	B	C
E2Q2-N15□□-□□ E2Q2-N20□□-□	45	0	0
E2Q2-N30M□□-□	90	250	30
E2Q2-N40M□□-□	120	300	40

Mutual Interference

If more than one Sensor is located in parallel, ensure to maintain enough space between adjacent Sensors to suppress mutual interference as provided in the following diagram.

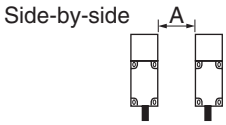

Mutual Interference (Unit: mm)

Model Length	A
E2Q2-N15□□-□□ E2Q2-N20□□-□	40
E2Q2-N30M□□-□	120
E2Q2-N40M□□-□	150

Power Reset Time

The Sensor is ready to operate within 300 ms after the Sensor is turned ON. If the load and Sensor are connected to independent power supplies respectively, be sure to turn ON the Sensor before supplying power to the load.

Power OFF

The Proximity Sensor may output a pulse signal when it is turned OFF. Therefore, it is recommended that the load be turned OFF before turning OFF the Proximity Sensor.

Power Supply Transformer

When using a DC power supply, make sure that the DC power supply has an insulated transformer. Do not use a DC power supply with an auto-transformer.

Sensing Object

The sensing distance of the Proximity Sensor vary with the metal coating on sensing objects.

Wiring

High-tension cables

Wiring through Metal Conduit:

If there is power or high-tension line near the cable of the Proximity Sensor, wire the cable through an independent metal conduit to prevent against Proximity Sensor damage or malfunction.

Mounting

Mounting the Sensor

The Proximity Sensor must be subjected to excessive shock with a hammer when it is installed, otherwise the Proximity Sensor may be damaged or lose its water-resistivity.

Maintenance and Inspection

Periodically perform the following checks to ensure stable operation of the Proximity Sensor over a long period of time.

- Check for mounting position, dislocation, looseness or distortion of the Proximity Sensor and sensing objects.
- Check for loose wiring and connections, improper contacts and line breakage.
- Check for attachment or accumulation of metal powder or dust.
- Check for abnormal temperature conditions and other environmental conditions.

Never disassemble or repair the Sensor.

Environment

Water Resistivity

Do not use the Proximity Sensor underwater, outdoors or in the rain.

Operating Environment

Be sure to use the Proximity Sensor within its operating ambient temperature range and do not use the Proximity Sensor outdoors so that its reliability and life expectancy can be maintained. Although the Proximity Sensor is water resistive, a cover to protect the Proximity Sensor from water or water-soluble machining oil is recommended so that its reliability and life expectancy can be maintained.

Do not use the Proximity Sensor in an environment with chemical gas (e.g., strong alkaline or acid gasses including nitric, chromic and concentrated sulfuric acid gases).

Inrush Current

A load that has a large inrush current (e.g., a lamp or motor) will damage the Proximity Sensor, in this case connect the load to the Proximity Sensor through a Relay

ALL DIMENSIONS SHOWN ARE IN MILLIMETERS.
To convert millimeters into inches, multiply by 0.03937. To convert grams into ounces, multiply by 0.03527.

Cat. No. D01E-EN-02

In the interest of product improvement, specifications are subject to change without notice.

Mouser Electronics

Authorized Distributor

Click to View Pricing, Inventory, Delivery & Lifecycle Information:

Omron:
E2Q2-N30MY4-U E2Q2-N15Y4-U E2Q2-N20F3-U E2Q2-N30ME3-U E2Q2-N30MF3-U E2Q2-N20E3-U E2Q2-N15Y4-51 E2Q2-N15F1-51